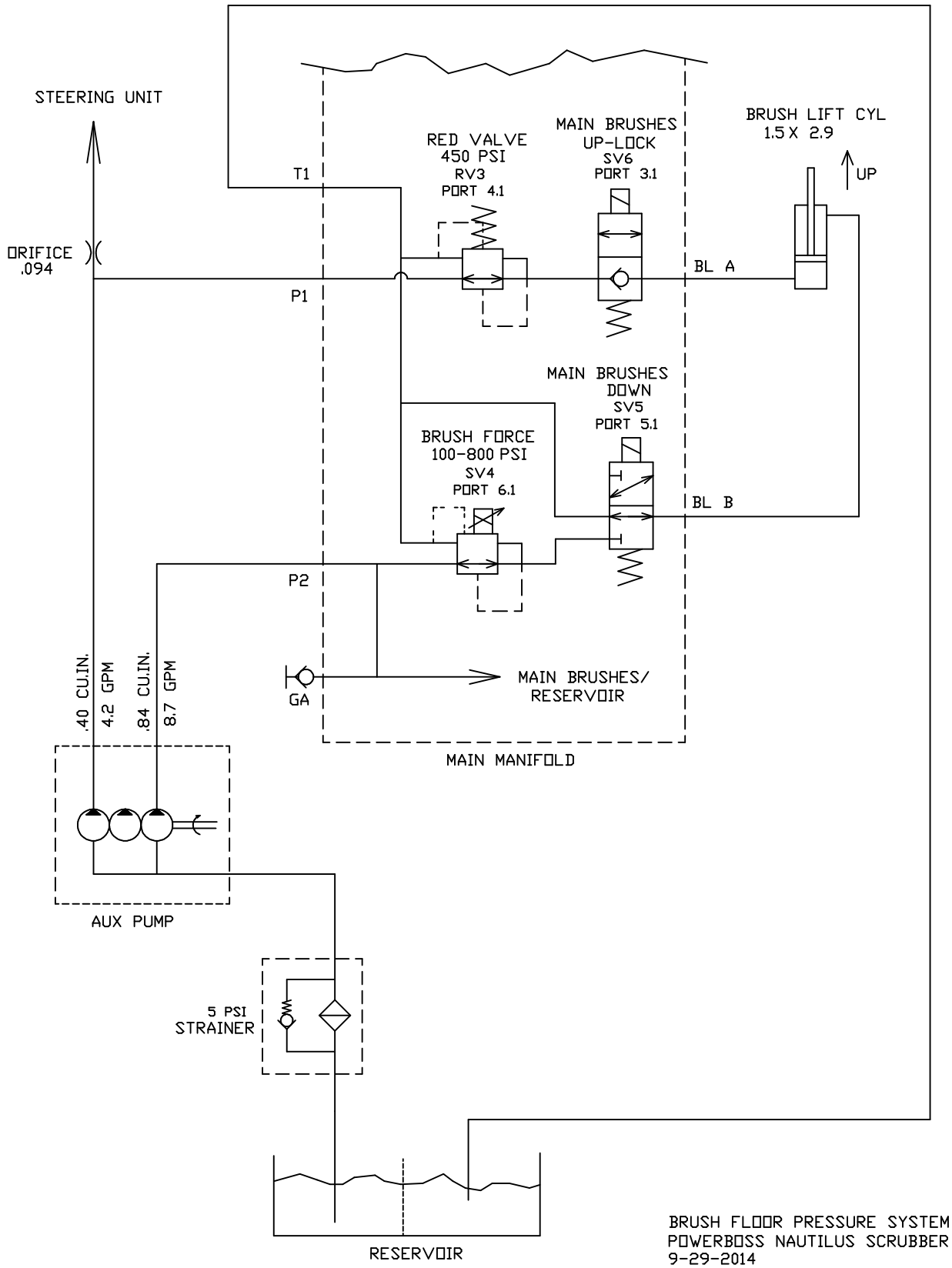

BRUSH FLOOR PRESSURE SYSTEM
POWERBOSS NAUTILUS SCRUBBER
9-29-2014